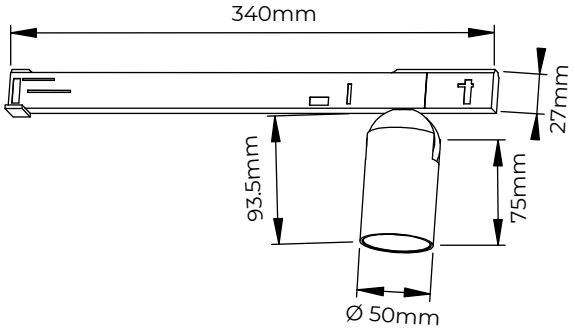
340mm
27mm
93.5mm
75mm
Ø 50mm

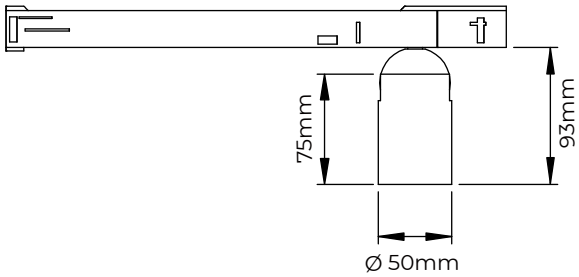
75mm
93mm
Ø 50mm